Inside Console

Main Electrical Enclosure

10 X 10 JIC Enclosure
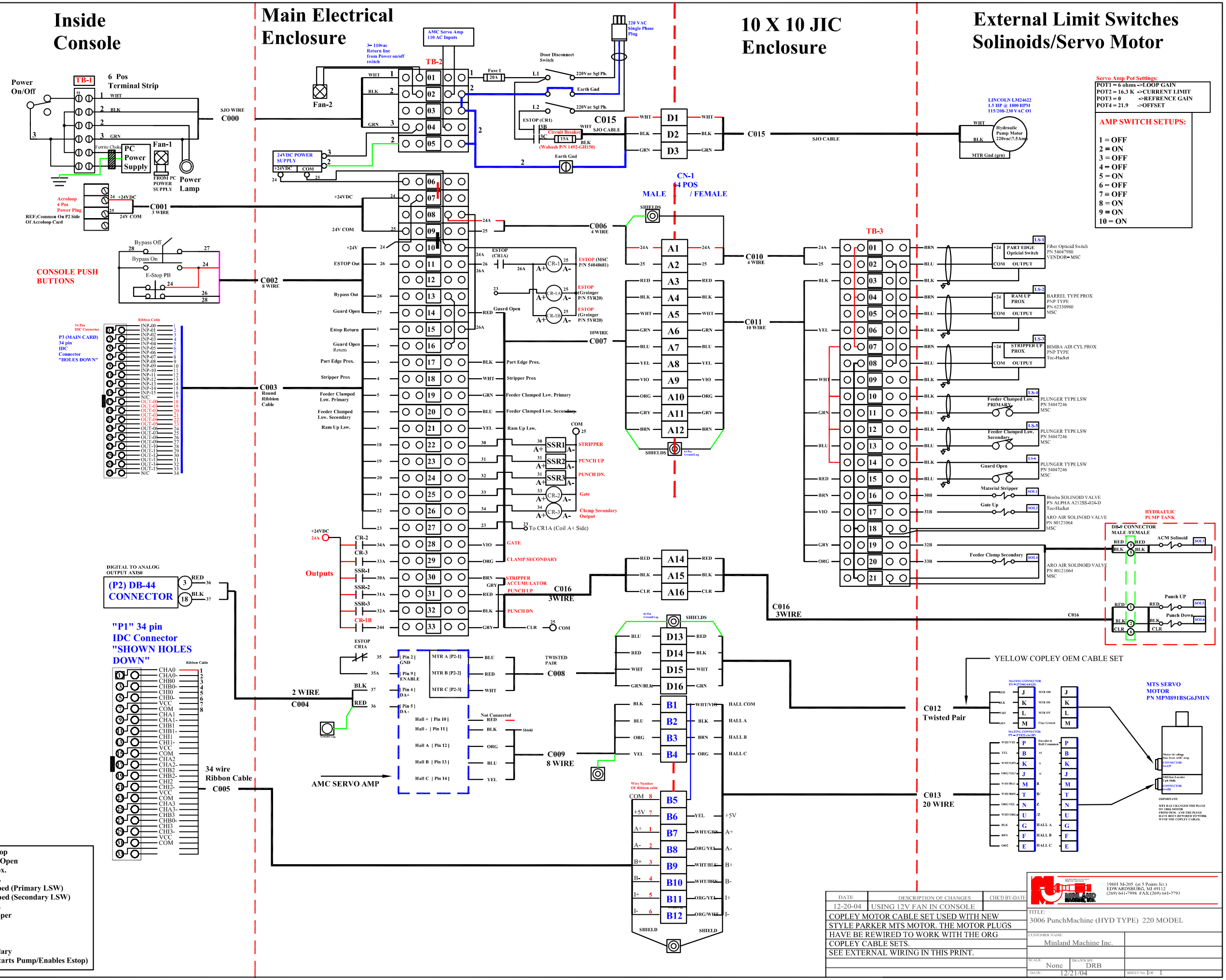
External Limit Switches Solinoids/Servo Motor